ZERO-MAX®

CD® Couplings Power-Series

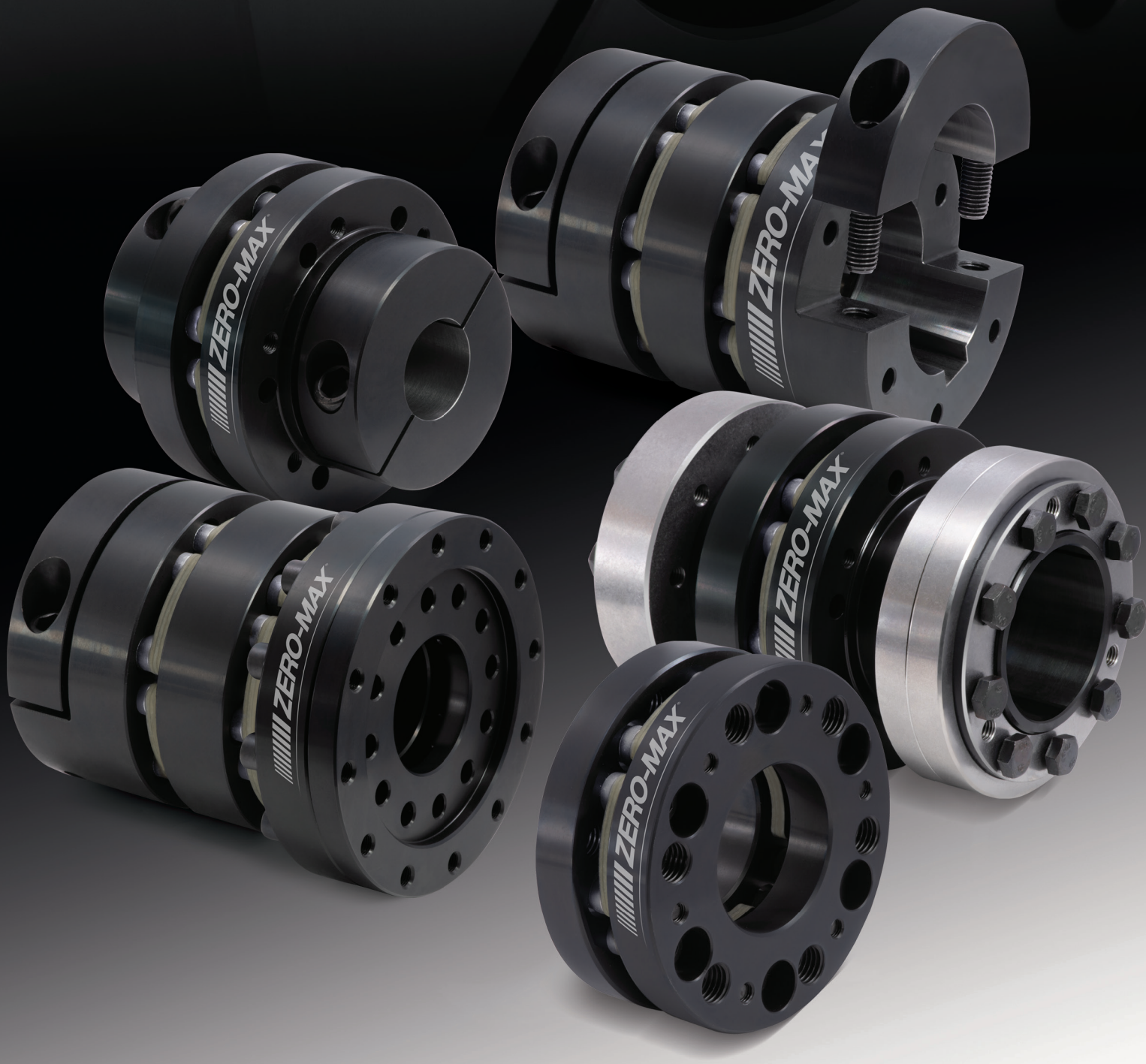

CD® Couplings Power-Series

The CD Power-Series is the latest addition to Zero-Max's field-proven line of Composite Disc Shaft Couplings. Built upon decades of experience, the design of the CD Power-Series features a higher power-density, providing higher torque capacity in a smaller and more compact solution. The CD Power-Series also features the proven composite disc technology that has made Zero-Max the choice of engineers in the most demanding motion control applications. From its initial concept through its high quality manufacturing processes, the CD Power-Series is engineered for precise high-torque operation.

The CD Power-Series leverages Zero-Max's experience and expertise integrating a Composite Disc Pack for superior performance in a Flexible Shaft Coupling. While maintaining the precision machining and tolerancing for proper fit, high concentricity, and ultimate performance that Zero-Max CD Couplings are known for, the CD Power-Series addresses customer feedback for higher torque capacity in a smaller space envelope. The careful design addresses this increasing need, while still providing for easy customization to fit unique applications with specific needs.

SERVO RATED

- **High Power Density** – Higher Torque/Smaller Package
- **Field Proven Composite Disc** – Long Operational Life
- **High Torsional Stiffness** – High Accuracy
- **Zero-Backlash – Precision Applications**
- **10 Sizes** – 5 Standard Hub Styles
- **Fully Customizable** – See page 12

CD Coupling Design

- Maintenance Free Operation
- Reliable Consistency
- RoHS Compliant

Demanding Motion Profiles

- High Speed – 24/7 Operation
- High Dynamic Load Capacity
- Reversing, Indexing, etc.

Composite Disc Pack

- Non-Conductive / Chemical Resistant
- Temp: -70°F to 250°F (-57°C to 121°C)
- Longer Life than Metal Discs

Demanding Applications

- Precise Positioning
- Repeatable Accuracy
- Shaft Misalignment

Power & Performance

The CD Power-Series was designed with Power and Performance in mind to meet today's most demanding applications where premium performance is required in high speed and high torque applications. These Composite Disc Couplings are constructed utilizing the newest advancements in manufacturing technology, including CNC machinery, high precision tooling, and custom-engineered fixtures, are made from high quality steel, and include a black oxide coating as standard for mild corrosion protection. Alternative materials, platings, etc. available upon request. The CD Power-Series are ideal solutions for the toughest operating conditions – including those with aggressive motion profiles that consist of repetitive speed changes, starting/stopping, indexing, reversing, etc. Common applications are found in packaging, pick-and-place, gear reducers, test stands, specialty machines, and other demanding applications that require servo-rated shaft couplings. Contact the factory for assistance with selection or customization.

Standard Configurations:

The CD Power-Series is available in Single-Flex (for maximum torsional stiffness) and Double-Flex (for maximum shaft misalignment capacity), as well as Floating-Shaft/Line-Shaft configurations upon request. 10 Standard Sizes and 5 Standard Hub Styles.

Clamping Hubs feature a compact design, simple installation, and strong holding power. Zero-Max offers both a 1-piece integral clamp and a 2-piece split clamping hub option for use with keyed or non-keyed shafts. Hubs that use a shrink disc (included) are also available upon request for high torque transmission on keyless shafts. The CD Power-Series also offers both Adaptor Mount (compatible with ISO 9409-1) and Flange Mount options for connection to flanged gear reducers, motors, actuators, robotic equipment, etc., or for integration into application-specific mounting features.
Zero-Max also offers extensive customization capabilities.

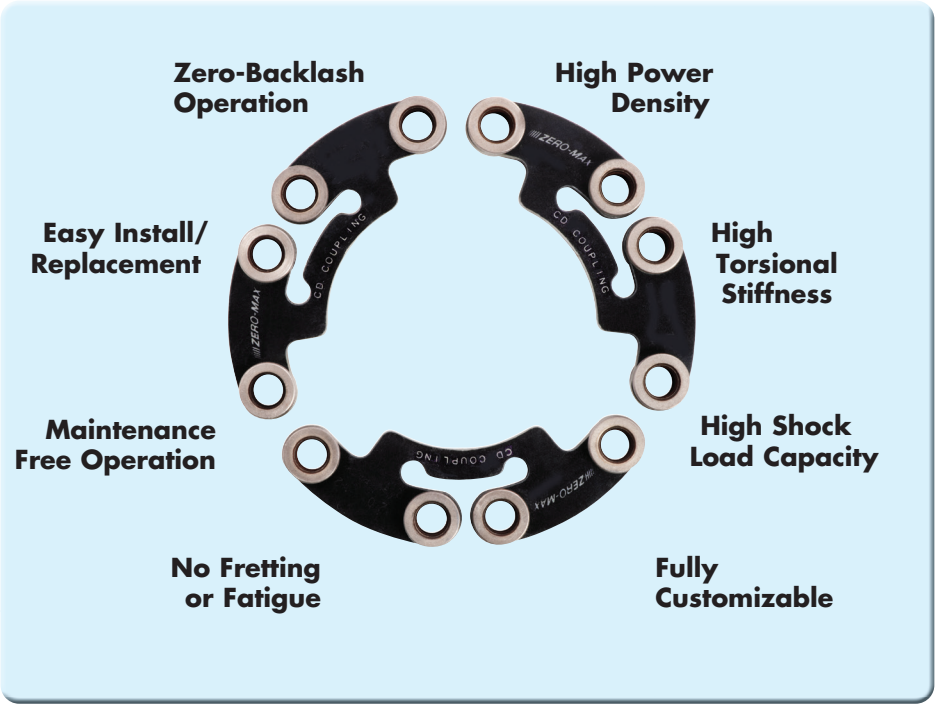

Split-Clamping Hubs

Integral Clamping Hubs

Shrink-Disc Hubs

Adaptor Mounts

Flange Hubs

This series features a traditional clamping hub on each end for use with both keyed and non-keyed* shafts. Clamping Hubs feature a compact design, simple installation, and strong holding power. The Power-Series offers both a single-piece (integral) clamping hub and a two-piece (split) clamping hub for larger bore sizes and easier installation.

- Zero Backlash
- Compact Design
- High Power Density
- High Torsional Stiffness
- Single and Double-Flex Models
- Integral and Split Clamp Options

Contact Factory for Shrink-Disc Hub Option

One-Piece Integral Clamp

Two-Piece Split Clamp

Shaft Bore Options (Single-Flex & Double-Flex)

Coupling Model	One Piece (C1) Integral Clamp	Two Piece (C2) Split Clamp	
	Max Bore (Keyed or non Keyed) *	Max Bore (keyed)	Max Bore (non Keyed) *
	Inch (mm)	Inch (mm)	Inch (mm)
8A55 8P55	1.125 (28mm)	1.125 (28mm)	1.125 (28mm)
8A67 8P67	1.375 (35mm)	1.375 (35mm)	1.375 (35mm)
12A85 12P85	1.063 (27mm)	1.563 (40mm)	1.938 (50mm)
12A95 12P95	1.063 (27mm)	1.938 (50mm)	2.125 (54mm)
12A105 12P105	1.250 (32mm)	2.125 (55mm)	2.375 (60mm)
12A120 12P120	1.375 (35mm)	2.375 (60mm)	2.750 (70mm)
12A140 12P140	1.563 (40mm)	2.938 (75mm)	3.250 (82mm)
12A165 12P165	N/A	3.438 (88mm)	3.750 (95mm)
12A190 12P190	N/A	4.000 (105mm)	4.500 (115mm)
12A215 12P215	N/A	4.500 (120mm)	5.188 (130mm)

* Keyed hub/shaft connections are recommended
* Keyless connections are available, but may not transmit the full torque rating of the coupling
* Please see pages 13-15 for transmittable torque ratings of clamping hubs with keyless connections
* Contact factory for other keyless hub mounting options or to discuss details of your application

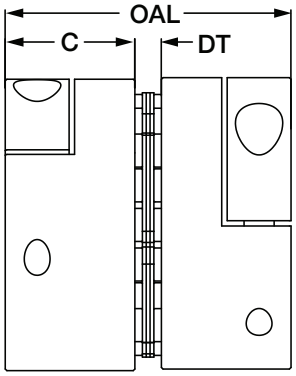

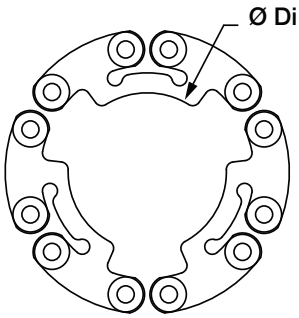

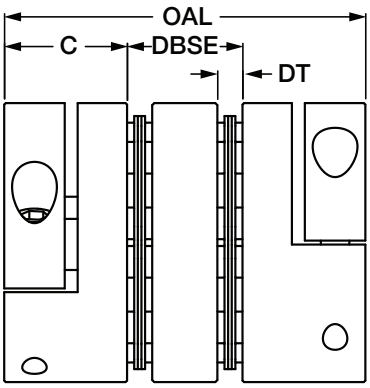

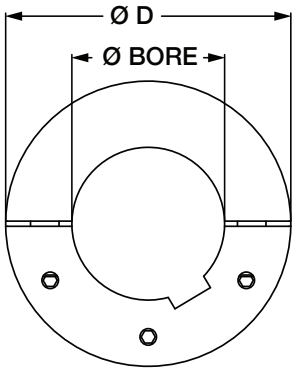

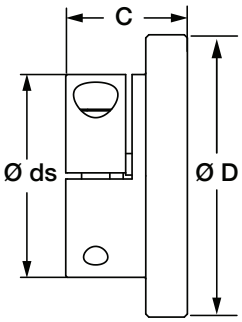

Integral Clamp Hub

Single-Flex Information

	Performance Data				Misalignment			Dimensional Data					
								D	ds	C	Di	DT	OAL
Coupling Model	Continuous Torque in-lbs (Nm)	Peak Torque in-lbs (Nm)	Maximum RPM (see note 1)	Torsional Stiffness in-lbs/deg (Nm/Rad)	Angular degrees	Parallel Inch (mm)	Axial Inch (mm)	Hub OD Inch (mm)	(one pc Clamp Hub only) Inch (mm)	Hub Length Inch (mm)	Disc Pack ID Inch (mm)	Disc Pack Thickness Inch (mm)	Inch (mm)
8A55	371 (42)	742 (84)	20,790	4,066 (26,324)	0.75	0.001 (0.02)	0.019 (0.47)	2.17 (55)	N/A	1.000 (25.4)	0.98 (24.9)	0.321 (8.2)	2.32 (59.0)
8A67	778 (88)	1,556 (176)	17,089	5,320 (34,442)	0.75	0.001 (0.03)	0.023 (0.58)	2.64 (67)	N/A	1.250 (31.8)	1.25 (31.8)	0.351 (8.9)	2.85 (72.4)
12A85	2,768 (313)	5,536 (626)	13,467	15,477 (100,200)	0.50	0.002 (0.05)	0.019 (0.48)	3.35 (85)	2.29 (58.2)	1.313 (33.4)	1.63 (41.4)	0.281 (7.1)	2.91 (73.8)
12A95	4,000 (452)	8,000 (904)	12,063	24,116 (156,129)	0.50	0.002 (0.05)	0.019 (0.48)	3.74 (95)	2.64 (67.1)	1.500 (38.1)	1.88 (47.8)	0.326 (8.3)	3.33 (84.5)
12A105	5,800 (655)	11,600 (1,311)	10,924	32,921 (213,134)	0.50	0.002 (0.06)	0.022 (0.56)	4.13 (105)	2.89 (73.4)	1.875 (47.6)	2.05 (52.1)	0.426 (10.8)	4.18 (106)
12A120	9,000 (1,017)	18,000 (2,034)	9,558	58,433 (378,301)	0.50	0.003 (0.07)	0.021 (0.53)	4.72 (120)	3.31 (84.1)	2.125 (54.0)	2.34 (59.4)	0.486 (12.3)	4.74 (120)
12A140	16,000 (1,808)	32,000 (3,616)	8,188	87,189 (564,470)	0.50	0.003 (0.08)	0.029 (0.74)	5.51 (140)	3.96 (101)	2.375 (60.3)	2.78 (70.6)	0.486 (12.3)	5.24 (133)
12A165	27,500 (3,107)	55,000 (6,215)	6,941	161,541 (1,045,833)	0.50	0.004 (0.09)	0.033 (0.84)	6.50 (165)	N/A	2.500 (63.5)	3.34 (84.8)	0.584 (14.8)	5.58 (142)
12A190	43,500 (4,915)	87,000 (9,831)	6,031	266,961 (1,728,333)	0.50	0.004 (0.11)	0.037 (0.94)	7.48 (190)	N/A	2.750 (69.9)	3.89 (98.8)	0.706 (17.9)	6.21 (158)
12A215	65,000 (7,345)	130,000 (14,689)	5,326	412,536 (2,670,800)	0.50	0.005 (0.13)	0.041 (1.04)	8.47 (215)	N/A	3.000 (76.2)	4.45 (113)	0.806 (20.5)	6.81 (173)

Double-Flex Information

	Performance Data				Misalignment			Dimensional Data						
								D	ds	C	Di	DT	DBSE	OAL
Coupling Model	Continuous Torque in-lbs (Nm)	Peak Torque in-lbs (Nm)	Maximum RPM (see note 1)	Torsional Stiffness in-lbs/deg (Nm/Rad)	Angular degrees	Parallel Inch (mm)	Axial Inch (mm)	Hub OD Inch (mm)	(one pc Clamp Hub only) Inch (mm)	Hub Length Inch (mm)	Disc Pack ID Inch (mm)	Disc Pack Thickness Inch (mm)	Inch (mm)	Inch (mm)
8P55	371 (42)	742 (84)	20,790	2,033 (13,162)	0.75	0.010 (0.25)	0.038 (0.97)	2.17 (55)	N/A	1.000 (25.4)	0.98 (24.9)	0.321 (8.2)	1.14 (29.0)	3.14 (79.8)
8P67	778 (88)	1,556 (176)	16,289	2,660 (17,221)	0.75	0.013 (0.33)	0.056 (1.42)	2.64 (67)	N/A	1.250 (31.8)	1.25 (31.8)	0.351 (8.9)	1.33 (33.8)	3.832 (97.3)
12P85	2,768 (313)	5,536 (626)	9,877	7,738 (50,097)	0.50	0.009 (0.23)	0.038 (0.97)	3.35 (85)	2.29 (58.2)	1.313 (33.4)	1.63 (41.4)	0.281 (7.1)	1.35 (34.3)	3.98 (101)
12P95	4,000 (452)	8,000 (904)	12,062	12,058 (78,065)	0.50	0.010 (0.25)	0.038 (0.97)	3.74 (95)	2.64 (67.1)	1.500 (38.1)	1.88 (47.8)	0.326 (8.3)	1.52 (38.6)	4.52 (115)
12P105	5,800 (655)	11,600 (1,311)	9,603	16,461 (106,570)	0.50	0.012 (0.30)	0.044 (1.12)	4.13 (105)	2.89 (73.4)	1.875 (47.6)	2.05 (52.1)	0.426 (10.8)	1.84 (46.6)	5.59 (142)
12P120	9,000 (1,017)	18,000 (2,034)	9,558	29,216 (189,147)	0.50	0.014 (0.36)	0.042 (1.07)	4.72 (120)	3.31 (84.1)	2.125 (54.0)	2.34 (59.4)	0.486 (12.3)	2.07 (52.7)	6.32 (161)
12P140	16,000 (1,808)	32,000 (3,616)	7,882	43,594 (282,232)	0.50	0.015 (0.38)	0.058 (1.47)	5.51 (140)	3.96 (101)	2.375 (60.3)	2.78 (70.6)	0.486 (12.3)	2.23 (56.7)	6.98 (177)
12P165	27,500 (3,107)	55,000 (6,215)	6,940	80,771 (522,920)	0.50	0.018 (0.46)	0.066 (1.68)	6.50 (165)	N/A	2.500 (63.5)	3.34 (84.8)	0.584 (14.8)	2.66 (67.7)	7.66 (195)
12P190	43,500 (4,915)	87,000 (9,831)	6,031	133,480 (864,163)	0.50	0.022 (0.56)	0.074 (1.88)	7.48 (190)	N/A	2.750 (69.9)	3.89 (98.8)	0.706 (17.9)	3.18 (80.9)	8.68 (221)
12P215	65,000 (7,345)	130,000 (14,689)	5,326	206,268 (1,335,400)	0.50	0.026 (0.66)	0.082 (2.08)	8.47 (215)	N/A	3.000 (76.2)	4.45 (113)	0.806 (20.5)	3.78 (96.0)	9.78 (248)

Note: 1) Balancing will be required to obtain maximum rpm - consult factory

Note: 2) See Page 11 for Weight and Inertia Specifications

This series features a traditional clamping hub on one end and an Adaptor Mount hub (compatible with ISO 9409-1) on the on the other end to mount directly to matching gear reducers, motors, actuators, robotic equipment, etc. The clamping hub works with keyed and non-keyed* shafts offering simple installation and strong holding power in either a single-piece (integral) or two-piece (split) hub.

- Zero Backlash
- High Power Density
- Simplified Mounting
- High Torsional Stiffness
- Single and Double-Flex Models
- Integral and Split Clamp Options

Shaft Bore Options (Single-Flex & Double-Flex)

Coupling Model	One Piece (C1) Integral Clamp	Two Piece (C2) Split Clamp	
	Max Bore (Keyed or non Keyed) *	Bore Range (keyed)	Max Bore (non Keyed) *
	Inch (mm)	Inch (mm)	Inch (mm)
8A55 8P55	1.125 (28mm)	1.125 (28mm)	1.125 (28mm)
8A67 8P67	1.375 (35mm)	1.375 (35mm)	1.375 (35mm)
12A85 12P85	1.063 (27mm)	1.563 (40mm)	1.938 (50mm)
12A105 12P105	1.250 (32mm)	2.125 (55mm)	2.375 (60mm)
12A140 12P140	1.563 (40mm)	2.938 (75mm)	3.250 (82mm)
12A165 12P165	N/A	3.438 (88mm)	3.750 (95mm)
12A190 12P190	N/A	4.000 (105mm)	4.500 (115mm)

* Keyed hub/shaft connections are recommended
* Keyless connections are available, but may not transmit the full torque rating of the coupling
* Please see pages 13-15 for transmittable torque ratings of clamping hubs with keyless connections
* Contact factory for other keyless hub mounting options or to discuss details of your application

Contact Factory for Shrink-Disc Hub Option

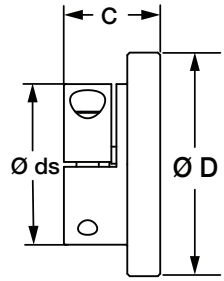

Integral Clamp Hub

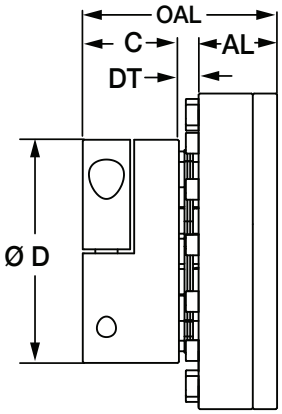

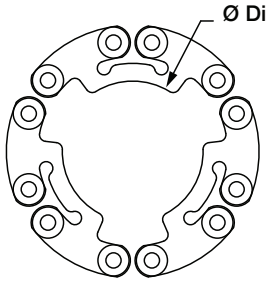

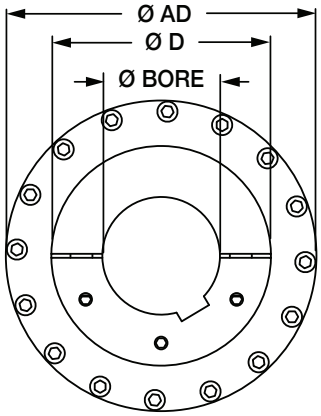

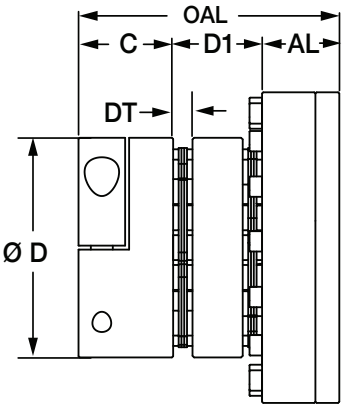

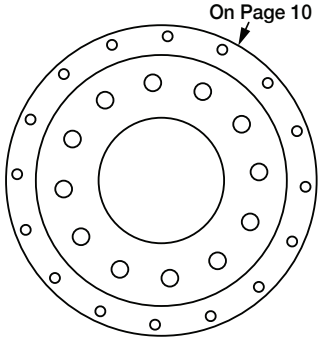

See Adaptor Mount Dimensions Table On Page 10

Single-Flex Information

Coupling Model / Adaptor Model	Performance Data: Continuous Torque in-lbs (Nm)	Peak Torque in-lbs (Nm)	Maximum RPM (see note 1)	Torsional Stiffness in-lbs/deg (Nm/Rad)	Misalignment: Angular degrees	Parallel Inch (mm)	Axial Inch (mm)	Dimensional Data: D Hub OD Inch (mm)	ds (one pc only) Inch (mm)	C Hub Length Inch (mm)	AD Adaptor Diameter Inch (mm)	AL Adaptor Length Inch (mm)	Di Disc Pack ID Inch (mm)	DT Disc Pack Thickness Inch (mm)	OAL Inch (mm)
8A55 AM31	371 (42)	742 (84)	17,903	4,066 (26,324)	0.75	0.001 (0.02)	0.019 (0.47)	2.17 (55)	N/A	1.000 (25.4)	2.52 (64.0)	0.91 (23.1)	0.98 (24.9)	0.321 (8.2)	2.23 (56.7)
8A67 AM50	778 (88)	1,556 (176)	13,115	5,320 (34,442)	0.75	0.001 (0.03)	0.023 (0.58)	2.64 (67)	N/A	1.250 (31.8)	3.44 (87.4)	1.06 (26.9)	1.25 (31.8)	0.351 (8.9)	2.66 67.6
12A85 AM63	2,768 (313)	5,536 (626)	9,877	15,477 (100,200)	0.50	0.002 (0.05)	0.019 (0.48)	3.35 (85)	2.29 (58.2)	1.313 (33.4)	4.33 (110)	1.22 (31.0)	1.63 (41.4)	0.281 (7.1)	2.81 (71.5)
12A105 AM80	5,800 (655)	11,600 (1,311)	8,308	32,921 (213,134)	0.50	0.002 (0.06)	0.022 (0.56)	4.13 (105)	2.89 (73.4)	1.875 (47.6)	5.43 (138)	1.34 (34.0)	2.05 (52.1)	0.426 (10.8)	3.64 (92.0)
12A140 AM125	16,000 (1,808)	32,000 (3,616)	5,784	87,189 (564,470)	0.50	0.003 (0.08)	0.029 (0.74)	5.51 (140)	3.96 (101)	2.375 (60.3)	7.80 (198)	1.94 (49.3)	2.78 (70.6)	0.486 (12.3)	4.80 (122))
12A165 AM140	27,500 (3,107)	55,000 (6,215)	4,502	161,541 (1,045,833)	0.50	0.004 (0.09)	0.033 (0.84)	6.50 (165)	N/A	2.500 (63.5)	10.02 (255)	2.61 (66.3)	3.34 (84.8)	0.584 (14.8)	5.69 (145)
12A190 AM160	43,500 (4,915)	87,000 (9,831)	4,028	266,961 (1,728,333)	0.50	0.004 (0.11)	0.037 (0.94)	7.48 (190)	N/A	2.750 (69.9)	11.20 (285)	3.00 (76.2)	3.89 (98.8)	0.706 (17.9)	6.46 (164)

Double-Flex Information

Coupling Model / Adaptor Model	Performance Data: Continuous Torque in-lbs (Nm)	Peak Torque in-lbs (Nm)	Maximum RPM (see note 1)	Torsional Stiffness in-lbs/deg (Nm/Rad)	Misalignment: Angular degrees	Parallel in-lbs (Nm)	Axial in-lbs (Nm)	Dimensional Data: D Hub OD Inch (mm)	ds (one pc only) Inch (mm)	C Hub Length Inch (mm)	AD Adaptor Diameter Inch (mm)	AL Adaptor Length Inch (mm)	Di Disc Pack ID Inch (mm)	DT Disc Pack Thickness Inch (mm)	D1 Inch (mm)	OAL Inch (mm)
8P55 AM31	371 (42)	742 (84)	17,903	2,033 (13,162))	0.75	0.010 (0.25)	0.038 (0.97)	2.17 (55)	N/A	1.000 (25.4)	2.52 (64.0)	0.91 (23.1)	0.98 (24.9)	0.321 (8.2)	1.14 (29.0)	3.05 (77.5)
8P67 AM50	778 (88)	1,556 (176)	13,115	2,660 (17,221))	0.75	0.013 (0.33)	0.056 (1.42)	2.64 (67)	N/A	1.250 (31.8)	3.44 (87.4)	1.06 (26.9)	1.25 (31.8)	0.351 (8.9)	1.33 (33.8)	3.64 (92.5)
12P85 AM63	2,768 (313)	5,536 (626)	9,877	7,738 (50,097)	0.50	0.009 (0.23)	0.038 (0.97)	3.35 (85)	2.29 (58.2)	1.313 (33.4)	4.33 (110)	1.22 (31.0)	1.63 (41.4)	0.281 (7.1)	1.35 (34.3)	3.88 (98.6)
12P105 AM80	5,800 (655)	11,600 (1,311)	8,308	16,461 (106,570)	0.50	0.012 (0.30)	0.044 (1.12)	4.13 (105)	2.89 (73.4)	1.875 (47.6)	5.43 (138)	1.34 (34.0)	2.05 (52.1)	0.426 (10.8)	1.84 (46.6)	5.05 (128)
12P140 AM125	16,000 (1,808)	32,000 (3,616)	5,784	43,594 (282,232)	0.50	0.015 (0.38)	0.058 (1.47)	5.51 (140)	3.96 (101)	2.375 (60.3)	7.80 (198)	1.94 (49.3)	2.78 (70.6)	0.486 (12.3)	2.23 (56.7)	6.55 (166)
12P165 AM140	27,500 (3,107)	55,000 (6,215)	4,502	80,771 (522,920)	0.50	0.018 (0.46)	0.066 (1.68)	6.50 (165)	N/A	2.500 (63.5)	10.02 (255)	2.61 (66.3)	3.34 (84.8)	0.584 (14.8)	2.66 (67.7)	7.77 (198)
12P190 AM160	43,500 (4,915)	87,000 (9,831)	4,028	133,480 (864,163)	0.50	0.022 (0.56)	0.074 (1.88)	7.48 (190)	N/A	2.750 (69.9)	11.20 (285)	3.00 (76.2)	3.89 (98.8)	0.706 (17.9)	3.18 (80.9)	8.93 (227)

Note: 1) Balancing will be required to obtain maximum rpm - consult factory

Note: 2) See Page 11 for Weight and Inertia Specifications

CD® Couplings Flange Configuration

This series is the most compact configuration offered in the Power-Series. A standard flange hub is integrated on each end that can be mounted to specific system outputs. This offers flexible mounting options for easy integration into unique systems while taking minimal space. This hub can also be integrated on one end with any of the other hub options. Alternate flange dimensions (bolt pattern, pilot diameter, etc.) available. Please contact factory for special flange requirements.

- Zero Backlash
- High Power Density
- Ultra-Compact Design
- High Torsional Stiffness
- Single and Double-Flex Models
- Easy Integration to Custom Systems

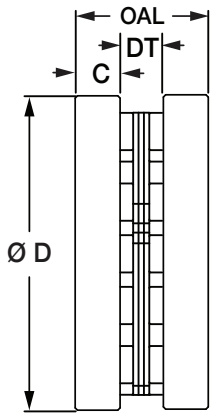

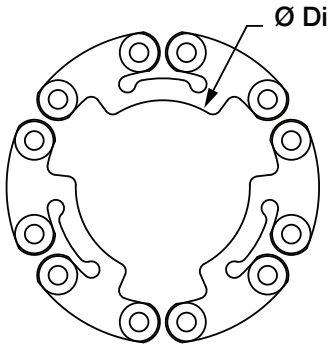

12-Bolt Disc-Pack

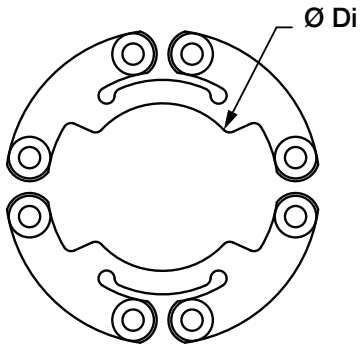

8-Bolt Disc-Pack

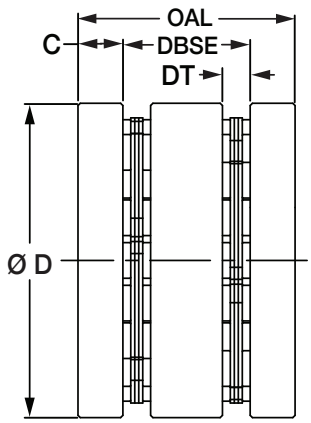

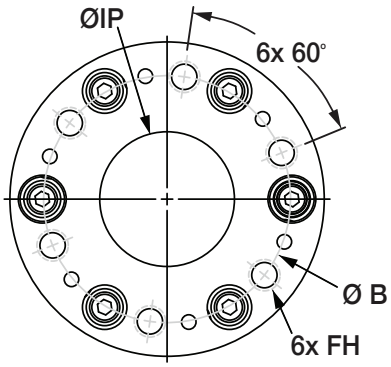

12-Bolt Flange

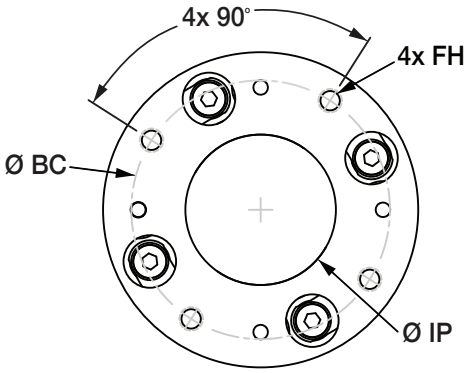

8-Bolt Flange

Single-Flex Information – FM1

Model	Performance Data				Misalignment			Dimensional Data								
	Continuous Torque in-lbs (Nm)	Peak Torque in-lbs (Nm)	Maximum RPM (see note 1)	Torsional Stiffness in-lbs/deg (Nm/Rad)	Angular degrees	Parallel Inch (mm)	Axial Inch (mm)	ØD Flange Plate OD Inch (mm)	ØBC Mounting Bolt Circle Diameter Inch (mm)	HP # of Mtg. Holes & Angle	FH Flange Bolt Hole Size	ØIP Flange Pilot ID Inch (mm)	C Flange Length Inch (mm)	Di Disc Pack ID Inch (mm)	DT Disc Pack Thickness Inch (mm)	OAL Inch (mm)
8A55	371 (42)	742 (84)	20,790	4,066 (26,324)	0.75	0.001 (0.02)	0.019 (0.47)	2.1654 / 2.1642 (55.000 / 54.970)	1.772 (45)	4 x 90 deg	M4-0.7	0.9843 / 0.9853 (25.000 / 25.025)	0.236 (6)	0.98 (24.9)	0.321 (8.2)	0.79 (20.1)
8A67	778 (88)	1,556 (176)	17,089	5,320 (34,442)	0.75	0.001 (0.03)	0.023 (0.58)	2.6378 / 2.6366 (67.000 / 66.970)	2.165 (55)	4 x 90 deg	M6-1.0	1.2598 / 1.2608 (32.000 / 32.025)	0.315 (8)	1.25 (31.8)	0.351 (8.9)	0.98 (24.9)
12A85	2,768 (313)	5,536 (626)	13,467	15,477 (100,200)	0.50	0.002 (0.05)	0.019 (0.48)	3.3465 / 3.3451 (85.000 / 84.965)	2.56 (65)	6 x 60 deg	M8-1.25	1.5748 / 1.5758 (40.000 / 40.025)	0.394 (10)	1.63 (41.4)	0.281 (7.1)	1.07 (27.2)
12A95	4,000 (452)	8,000 (904)	12,063	24,116 (156,129)	0.50	0.002 (0.05)	0.019 (0.48)	3.7402 / 3.7388 (95.000 / 94.965)	2.953 (75)	6 x 60 deg	M10-1.5	1.7717 / 1.7727 (45.000 / 45.025)	0.472 (12)	1.88 (47.8)	0.326 (8.3)	1.27 (32.3)
12A105	5,800 (655)	11,600 (1,311)	10,924	32,921 (213,134)	0.50	0.002 (0.06)	0.022 (0.56)	4.1339 / 4.1325 (105.000 / 104.965)	3.35 (85)	6 x 60 deg	M10-1.5	1.9685 / 1.9695 (50.000 / 50.025)	0.551 (14)	2.05 (52.1)	0.426 (10.8)	1.53 (38.8)
12A120	9,000 (1,017)	18,000 (2,034)	9,558	58,433 (378,301)	0.50	0.003 (0.07)	0.021 (0.53)	4.7244 / 4.7230 (120.000 / 119.965)	3.740 (95)	6 x 60 deg	M14-2.0	2.1654 / 2.1665 (55.000 / 55.030)	0.709 (18)	2.34 (59.4)	0.486 (12.3)	1.90 (48.4)
12A140	16,000 (1,808)	32,000 (3,616)	8,188	87,189 (564,470)	0.50	0.003 (0.08)	0.029 (0.74)	5.5118 / 5.5102 (140.000 / 139.960)	4.33 (110)	6 x 60 deg	M16-2.0	2.3622 / 2.3634 (60.000 / 60.030)	0.787 (20)	2.78 (70.6)	0.486 (12.3)	2.06 (52.3)
12A165	27,500 (3,107)	55,000 (6,215)	6,941	161,541 (1,045,833)	0.50	0.004 (0.09)	0.033 (0.84)	6.4961 / 6.4945 (165.000 / 164.960)	5.12 (130)	6 x 60 deg	M18-2.5	3.1496 / 3.1508 (80.000 / 80.030)	0.906 (23)	3.34 (84.8)	0.584 (14.8)	2.40 (60.9)
12A190	43,500 (4,915)	87,000 (9,831)	6,031	266,961 (1,728,333)	0.50	0.004 (0.11)	0.037 (0.94)	7.4803 / 7.4785 (190.000 / 189.954)	5.91 (150)	6 x 60 deg	M24-3.0	3.5433 / 3.5447 (90.000 / 90.035)	1.181 (30)	3.89 (98.8)	0.706 (17.9)	3.07 (77.9)
12A215	65,000 (7,345)	130,000 (14,689)	5,326	412,536 (2,670,800)	0.50	0.005 (0.13)	0.041 (1.04)	8.4646 / 8.4628 (215.00 / 214.954)	6.693 (170)	6 x 60 deg	M27–3.0	3.5433 / 3.5447 (90.000 / 90.035)	1.260 (32)	4.45 (113)	0.806 (20.5)	3.33 (84.5)

Double-Flex Information – FM1

Model	Performance Data				Misalignment			Dimensional Data									
	Continuous Torque in-lbs (Nm)	Peak Torque in-lbs (Nm)	Maximum RPM (see note 1)	Torsional Stiffness in-lbs/deg (Nm/Rad)	Angular degrees	Parallel Inch (mm)	Axial Inch (mm)	ØD Flange Plate OD Inch (mm)	ØBC Mounting Bolt Circle Diameter Inch (mm)	HP # of Mtg. Holes & Angle	FH Flange Bolt Hole Size	ØIP Flange Pilot ID Inch (mm)	C Flange Length Inch (mm)	Di Disc Pack ID Inch (mm)	DT Disc Pack Thickness Inch (mm)	DBSE Disc Pack Thickness Inch (mm)	OAL Inch (mm)
8P55	371 (42)	742 (84)	20,790	2,033 (13,162)	0.75	0.010 (0.25)	0.038 (0.97)	2.1654 / 2.1642 (55.000 / 54.970)	1.772 (45)	4 x 90 deg	M4-0.7	0.9843 / 0.9853 (25.000 / 25.025)	0.236 (6)	0.98 (24.9)	0.321 (8.2)	0.97 (24.7)	1.44 (36.7)
8P67	778 (88)	1,556 (176)	17,089	2,660 (17,221)	0.75	0.013 (0.33)	0.056 (1.42)	2.6378 / 2.6366 (67.000 / 66.970)	2.165 (55)	4 x 90 deg	M6-1.0	1.2598 / 1.2608 (32.000 / 32.025)	0.315 (8)	1.25 (31.8)	0.351 (8.9)	1.26 (32.0)	1.89 (48.0)
12P85	2,768 (313)	5,536 (626)	13,467	7,738 (50,097)	0.50	0.009 (0.23)	0.038 (0.97)	3.3465 / 3.3451 (85.000 / 84.965)	2.56 (65)	6 x 60 deg	M8-1.25	1.5748 / 1.5758 (40.000 / 40.025)	0.394 (10)	1.63 (41.4)	0.281 (7.1)	1.58 (40.0)	2.36 (60.0)
12P95	4,000 (452)	8,000 (904)	12,063	12,058 (78,065)	0.50	0.010 (0.25)	0.038 (0.97)	3.7402 / 3.7388 (95.000 / 94.965)	2.953 (75)	6 x 60 deg	M10-1.5	1.7717 / 1.7727 (45.000 / 45.025)	0.472 (12)	1.88 (47.8)	0.326 (8.3)	1.81 (46.0)	2.75 (70.0)
12P105	5,800 (655)	11,600 (1,311)	10,924	16,461 (106,570)	0.50	0.012 (0.30)	0.044 (1.12)	4.1339 / 4.1325 (105.000 / 104.965)	3.35 (85)	6 x 60 deg	M10-1.5	1.9685 / 1.9695 (50.000 / 50.025)	0.551 (14)	2.05 (52.1)	0.426 (10.8)	2.09 (53.0)	3.19 (81.0)
12P120	9,000 (1,017)	18,000 (2,034)	9,558	29,216 (189,147)	0.50	0.014 (0.36)	0.042 (1.07)	4.7244 / 4.7230 (120.000 / 119.965)	3.740 (95)	6 x 60 deg	M14-2.0	2.1654 / 2.1665 (55.000 / 55.030)	0.709 (18)	2.34 (59.4)	0.486 (12.3)	2.52 (64.0)	3.94 (100)
12P140	16,000 (1,808)	32,000 (3,616)	8,188	43,594 (282,232)	0.50	0.015 (0.38)	0.058 (1.47)	5.5118 / 5.5102 (140.000 / 139.960)	4.33 (110)	6 x 60 deg	M16-2.0	2.3622 / 2.3634 (60.000 / 60.030)	0.787 (20)	2.78 (70.6)	0.486 (12.3)	2.83 (72.0)	4.41 (112)
12P165	27,500 (3,107)	55,000 (6,215)	6,941	80,771 (522,920)	0.50	0.018 (0.46)	0.066 (1.68)	6.4961 / 6.4945 (165.000 / 164.960)	5.12 (130)	6 x 60 deg	M18-2.5	3.1496 / 3.1508 (80.000 / 80.030)	0.906 (23)	3.34 (84.8)	0.584 (14.8)	3.31 (84.0)	5.12 (130)
12P190	43,500 (4,915)	87,000 (9,831)	6,031	133,480 (864,163)	0.50	0.022 (0.56)	0.074 (1.88)	7.4803 / 7.4785 (190.000 / 189.954)	5.91 (150)	6 x 60 deg	M24-3.0	3.5433 / 3.5447 (90.000 / 90.035)	1.181 (30)	3.89 (98.8)	0.706 (17.9)	4.13 (105)	6.50 (165)
12P215	65,000 (7,345)	130,000 (14,689)	5,326	206,268 (1,335,400)	0.50	0.026 (0.66)	0.082 (2.08)	8.4646 / 8.4628 (215.00 / 214.954)	6.693 (170)	6 x 60 deg	M27-3.0	3.5433 / 3.5447 (90.000 / 90.035)	1.260 (32)	4.45 (113)	0.806 (20.5)	4.69 (119)	7.21 (183)

Note: 1) Balancing will be required to obtain maximum rpm - consult factory
Note: 2) See Page 11 for Weight and Inertia Specifications
Note: 3) Above Dimensions apply to Flange model "FM1"

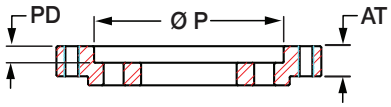

Adaptor Mounts Compatible with ISO 9409-1

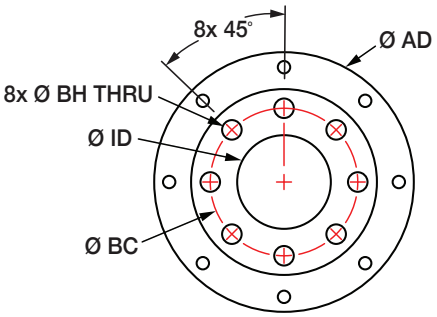

MODEL AM31 AND AM50

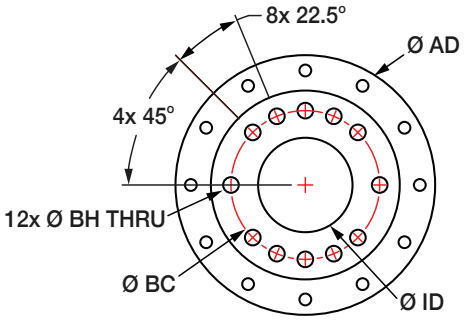

MODEL AM63

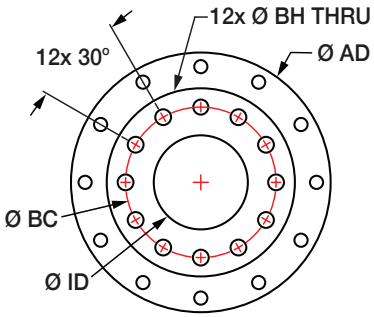

MODEL AM80 AND AM125

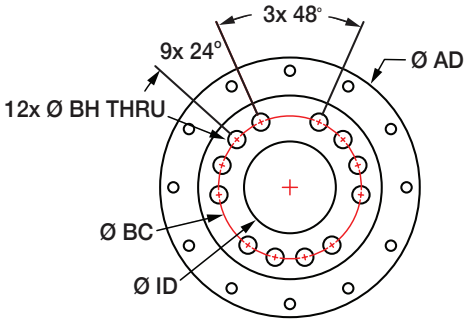

MODEL AM140 AND AM160

Adaptor Information

Coupling Model	Adaptor Model	Dimensional Data: AD Adaptor Plate Diameter Inch (mm)	ØP Pilot Diameter Inch (mm)	PD Pilot Depth Inch (mm)	AT Adaptor Plate Thickness Inch (mm)	ØBH Bolt Hole Diameter Inch (mm)	ØBC Bolt Circle Inch (mm)	ID Adaptor Plate ID Inch (mm)
8A55 8P55	AM31	2.52 (64.0)	1.5748 / 1.5757 (40.000 / 40.025)	0.11 (2.9)	0.28 (7.0)	0.21 (5.3)	1.24 (31.5)	0.79 (20.0)
8A67 8P67	AM50	3.44 (87.4)	2.4803 / 2.4813 (63.000 / 63.025)	0.22 (5.5)	0.39 (10.0)	0.26 (6.6)	1.97 (50.0)	1.25 (31.8)
12A85 12P85	AM63	4.33 (110)	3.1496 / 3.1506 (80.000 / 80.025)	0.22 (5.5)	0.94 (23.9)	0.26 (6.6)	2.48 (63.0)	1.58 (40.0)
12A105 12P105	AM80	5.43 (138)	3.9370 / 3.9384 (100.000 / 100.035)	0.22 (5.5)	0.47 (12.0)	0.33 (8.4)	3.15 (80.0)	1.97 (50.0)
12A140 12P140	AM125	7.80 (198)	6.2992 / 6.3008 (160.000 / 160.040)	0.28 (7.0)	0.60 (15.2)	0.42 (10.7)	4.92 (125)	3.15 (80.0)
12A165 12P165	AM140	10.02 (255)	7.0866 / 7.0882 (180.000 / 180.040)	0.39 (10.0)	0.99 (25.2)	0.67 (17.0)	5.51 (140)	3.54 (90.0)
12A190 12P190	AM160	11.20 (285)	7.7874 / 7.8758 (200.000 / 200.045)	0.32 (8.0)	1.07 (27.2)	0.83 (21.0)	6.30 (160.0)	3.54 (90.0)

Note 1): Model numbers correspond to bolt circle (ØBC)dimension.
Note 2): Contact factory if location pin is desired.

Weight - lb (kg)

Single-Flex	8A55	8A67	12A85	12A95	12A105	12A120	12A140	12A165	12A190	12A215
C1-C1 (max bores) Clamp x Clamp	1.36 (0.62)	2.53 (1.15)	3.30 (1.50)	4.84 (2.20)	7.65 (3.47)	11.8 (5.34)	18.1 (8.20)	N/A	N/A	N/A
C1-C2 (max bores) Clamp x Clamp	1.34 (0.61)	2.51 (1.14)	3.56 (1.61)	5.18 (2.35)	8.13 (3.69)	12.2 (5.55)	19.0 (8.64)	N/A	N/A	N/A
C2-C2 (max bores) Clamp x Clamp	1.33 (0.60)	2.49 (1.13)	3.82 (1.73)	5.51 (2.50)	8.60 (3.90)	12.7 (5.75)	20.0 (9.07)	27.9 (12.7)	41.2 (18.7)	56.3 (25.5)
C1 (max bore) - AM Clamp x Adaptor Mount	1.63 (0.74)	3.32 (1.51)	5.21 (2.36)	N/A	10.3 (4.65)	N/A	25.0 (11.3)	N/A	N/A	N/A
C2 (max bore) - AM Clamp x Adaptor Mount	1.61 (0.73)	3.31 (1.50)	5.47 (2.48)	N/A	10.7 (4.87)	N/A	26.0 (11.8)	51.7 (23.5)	76.9 (34.9)	N/A
Flange (FM1) Hubs	0.41 (0.19)	0.73 (0.33)	1.38 (0.63)	2.00 (0.91)	2.96 (1.34)	4.89 (2.22)	7.58 (3.44)	11.4 (5.17)	19.6 (8.88)	28.8 (13.1)

Double-Flex	8P55	8P67	12P85	12P95	12P105	12P120	12P140	12P165	12P190	12P215
C1-C1 (max bores) Clamp x Clamp	1.77 (0.80)	3.28 (1.49)	4.72 (2.14)	6.69 (3.03)	10.4 (4.72)	15.8 (7.17)	24.1 (10.9)	N/A	N/A	N/A
C1-C2 (max bores) Clamp x Clamp	1.75 (0.79)	3.26 (1.48)	4.98 (2.26)	7.03 (3.19)	10.9 (4.93)	16.3 (7.38)	25.0 (11.4)	N/A	N/A	N/A
C2-C2 (max bores) Clamp x Clamp	1.73 (0.78)	3.23 (1.47)	5.24 (2.38)	7.36 (3.34)	11.3 (5.14)	16.7 (7.58)	26.0 (11.8)	37.7 (17.1)	56.8 (25.8)	80.6 (36.5)
C1 (max bore) - AM Clamp x Adaptor Mount	2.03 (0.92)	4.07 (1.85)	6.62 (3.00)	N/A	13.0 (5.90)	N/A	31.0 (14.1)	N/A	N/A	N/A
C2 (max bore) - AM Clamp x Adaptor Mount	2.01 (0.91)	4.05 (1.84)	6.88 (3.12)	N/A	13.5 (6.11)	N/A	32.0 (14.5)	61.6 (27.9)	92.6 (42.0)	N/A
Flange (FM1) Hubs	0.83 (0.38)	1.48 (0.67)	2.79 (1.27)	3.85 (1.75)	5.70 (2.59)	8.92 (4.05)	13.6 (6.15)	21.3 (9.64)	35.2 (16.0)	53.1 (24.1)

Inertia - lb-in² (kg-cm²)

Single-Flex	8A55	8A67	12A85	12A95	12A105	12A120	12A140	12A165	12A190	12A215
C1-C1 (max bores) Clamp x Clamp	1.01 (2.96)	2.80 (8.19)	4.02 (11.76)	6.92 (20.25)	13.97 (40.88)	28.04 (82.06)	57.86 (169.3)	N/A	N/A	N/A
C1-C2 (max bores) Clamp x Clamp	0.99 (2.90)	2.77 (8.11)	5.56 (16.27)	9.77 (28.59)	19.10 (55.89)	37.56 (109.9)	77.57 (227.0)	N/A	N/A	N/A
C2-C2 (max bores) Clamp x Clamp	0.98 (2.87)	2.74 (8.02)	7.10 (20.78)	12.63 (36.96)	24.20 (70.82)	47.10 (137.8)	97.23 (284.5)	194.1 (568.0)	388.6 (1,137)	686.6 (2,009)
C1-AM (max bore) Clamp x Adaptor Mount	1.37 (4.01)	5.18 (15.16)	12.34 (36.11)	N/A	36.11 (105.7)	N/A	180.46 (528.1)	N/A	N/A	N/A
C2-AM (max bore) Clamp x Adaptor Mount	1.36 (3.98)	5.15 (15.07)	13.88 (40.62)	N/A	41.25 (120.7)	N/A	200.2 (585.9)	680.0 (1,990)	1,256 (3,676)	N/A
Flange (FM1) Hubs	0.31 (0.91)	0.77 (2.25)	2.35 (6.88)	4.24 (12.41)	7.68 (22.47)	16.34 (47.82)	33.61 (98.36)	73.37 (214.7)	165.3 (483.6)	419.1 (1,226)

Double-Flex	8P55	8P67	12P85	12P95	12P105	12P120	12P140	12P165	12P190	12P215
C1-C1 (max bores) Clamp x Clamp	1.29 (3.78)	3.60 (10.54)	6.46 (18.90)	11.01 (32.22)	21.30 (62.33)	42.06 (123.1)	86.62 (253.5)	N/A	N/A	N/A
C1-C2 (max bores) Clamp x Clamp	1.28 (3.75)	3.57 (10.45)	8.00 (23.41)	13.86 (40.56)	26.40 (77.26)	51.59 (151.0)	106.4 (311.3)	N/A	N/A	N/A
C2-C2 (max bores) Clamp x Clamp	1.26 (3.69)	3.53 (10.33)	9.55 (27.95)	16.70 (48.87)	31.56 (92.36)	61.10 (178.8)	126.1 (369.0)	259.7 (760.0)	527.4 (1,543)	961.9 (2,815)
C1-AM (max bore) Clamp x Adaptor Mount	1.66 (4.86)	5.97 (17.47)	14.78 (43.25)	N/A	43.40 (127.0)	N/A	209.2 (612.2)	N/A	N/A	N/A
C2-AM (max bore) Clamp x Adaptor Mount	1.64 (4.80)	5.95 (17.41)	16.32 (47.76)	N/A	48.54 (142.0)	N/A	228.9 (670.0)	745.6 (2,182)	1,392 (4,073)	N/A
Flange (FM1) Hubs	0.63 (1.84)	1.56 (4.57)	4.79 (14.02)	8.33 (24.38)	14.96 (43.78)	30.36 (88.85)	62.35 (182.5)	139.0 (406.8)	304.0 (889.6)	572.4 (1,675)

There are over 100 standard models and sizes of the CD Power-Series to fit most applications. If a standard solution will not satisfy your requirements, we will quickly design a custom solution that will. With experience from thousands of different applications, our extensive database brings instant solutions for the most challenging applications.

Custom Designs

No application is too large, too small, or too difficult for a CD Coupling. Zero-Max has the ability to provide imaginative solutions for virtually every coupling need.

Design Engineering Assistance

Zero-Max Engineering is continually involved in custom projects using the latest technology available to solve your coupling needs. Our recommendations are based on decades of coupling and industry experience.

Quality Service

From the first contact with the factory to the completion of the approval drawing, to delivery of the coupling, Zero-Max will provide quality service throughout the process, including after-sale service and support.

Customization Options

- Higher Torque Capacity
- Higher Misalignment Capacity
- Different Materials/Platings
- Special Bores
- Customized Hubs
- Floating Shafts/Line Shafts
- Special Mounting Features
- High Speed Operation
- Special Features
- Larger Sizes
- Smaller Space Requirements

Key Is The Patented Disc Design

The key to the high performance capabilities of the CD Coupling lies in the Composite Disc Pack. Everything about this unique part contributes to its high performance characteristics. The shape, the cutting process, the material used, the order and the orientation of the layers, and even the coating have important significance. Zero-Max has been perfecting this design for decades and has accumulated a vast database of solutions.

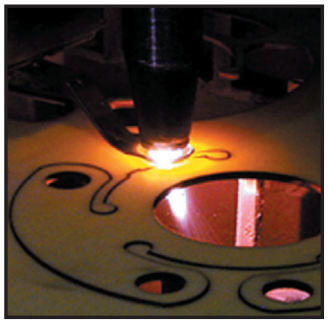

Finite Element Analysis

Using Finite Element Analysis (FEA), the disc design can be easily modified along with changes in the composite material to fit your specific application requirements.

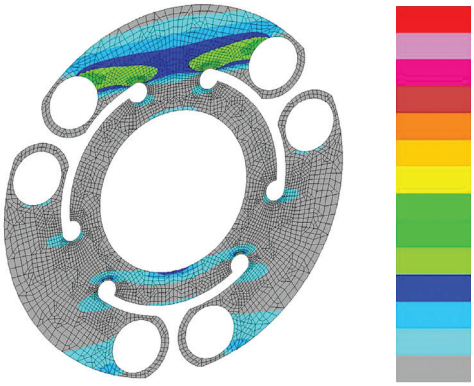

Design, Analysis, Test, Production

Zero-Max is a vertically integrated manufacturer with in-house design, testing, quality control, and production teams. All our processes are geared toward supplying the correct coupling at the lowest cost and in the shortest lead-time.

The Zero-Max test laboratory is capable of all types of static and dynamic testing to ensure that the design specifications are met.

Transmittable Torque for One-Piece Integral Clamp Hubs Non-Keyed Bore Hubs

If Higher Transmittable Torque is Required, consider using Keyway, Split Clamp Hub, Larger Size Coupling, Shrink-Disc Hub, or Special Design. Please Contact Factory.

Bore Size (inch)	CD® Power Series Model Number							Bore Size (inch)
	8_55	8_67	12_85	12_95	12_105	12_120	12_140	
0.500	206							0.500
0.563	245							0.563
0.625	303	352						0.625
0.688	333	387						0.688
0.750	363	422						0.750
0.813	393	458						0.813
0.875	424	493	1,089	1,676				0.875
0.938	454	528	1,167	1,796				0.938
1.000	484	563	1,245	1,916				1.000
1.063	514	598	1,322	2,035				1.063
1.125	545	634			2,239	4,274		1.125
1.188		669			2,363	4,511		1.188
1.250		704			2,488	4,749	6,437	1.250
1.313		739				4,986	6,759	1.313
1.375		774				5,224	7,081	1.375
1.438							7,402	1.438
1.500							7,724	1.500
1.563							8,046	1.563
Cont. Torque (In-Lb)	371	778	2,768	4,000	5,800	9,000	16,000	
Peak Torque (In-Lb)	742	1,556	5,536	8,000	11,600	18,000	32,000	

Contact Factory for smaller bore options

Contact Factory if higher transmittable torque keyless hub options are required

Listed number indicates the transmittable torque of the keyless hub connection (in-lb)

Bore Size (mm)	CD® Power Series Model Number							Bore Size (mm)
	8_55	8_67	12_85	12_95	12_105	12_120	12_140	
12	21							12
14	27							14
15	29							15
16	34	40						16
18	39	45						18
19	41	48						19
20	43	50						20
22	47	55	122	187				22
24	52	60	133	205				24
25	54	63	138	213				25
28	60	70			248	473		28
30		75			266	507		30
32		80			283	541	733	32
35		88				592	802	35
38							871	38
40							916	40
Cont. Torque (Nm)	42	88	313	452	655	1,017	1,808	
Peak Torque (Nm)	84	176	626	904	1,310	2,034	3,616	

Contact Factory for smaller bore options

Contact Factory if higher transmittable torque keyless hub options are required

Listed number indicates the transmittable torque of the keyless hub connection (Nm)

Integral Clamping Hubs

Contact Factory for Shrink-Disc Hub Option

See Pages 14-15 for Split Clamp Option

Transmittable Torque for Two-Piece Split Clamp Hubs -- Non-Keyed Bore Hubs (Inch)

If Higher Transmittable Torque is Required, consider using Keyway, Larger Size Coupling, Shrink-Disc Hub, or Special Design. Please Contact Factory.

Bore Size (inch)	CD® Power Series Model Number										Bore Size (inch)
	8_55	8_67	12_85	12_95	12_105	12_120	12_140	12_165	12_190	12_215	
0.500	317										0.500
0.563	377										0.563
0.625	466	541									0.625
0.688	512	596									0.688
0.750	559	650									0.750
0.813	605	704									0.813
0.875	652	758	1,676	2,579							0.875
0.938	698	812	1,795	2,763							0.938
1.000	●	866	1,915	2,947							1.000
1.063	●	921	2,035	3,131							1.063
1.125	●	975	2,154	3,315	3,445	6,575					1.125
1.188		1,029	2,274	3,500	3,636	6,941					1.188
1.250		1,083	2,394	3,684	3,827	7,306	9,903				1.250
1.313		1,137	2,513	3,868	4,019	7,671	10,398				1.313
1.375		1,191	2,633	4,052	4,210	8,037	10,893	13,165			1.375
1.500			2,872	4,421	4,593	8,767	11,883	14,362			1.500
1.625			3,112	4,789	4,976	9,498	12,874	15,558	17,289		1.625
1.750			3,351	5,157	5,358	10,228	13,864	16,755	18,619		1.750
1.875			3,590	5,526	5,741	10,959	14,854	17,952	19,949		1.875
2.000				5,894	6,124	11,690	15,845	19,149	21,279	26,953	2.000
2.125				6,262	6,506	12,420	16,835	20,346	22,609	28,638	2.125
2.250					6,889	13,151	17,825	21,542	23,939	30,323	2.250
2.375					7,272	13,881	18,815	22,739	25,269	32,007	2.375
2.500						14,612	19,806	23,936	26,599	33,692	2.500
2.625						15,343	20,796	25,133	27,929	35,376	2.625
2.750						16,073	21,786	26,330	29,259	37,061	2.750
2.875							22,777	27,526	30,589	38,746	2.875
3.000							23,767	28,723	31,919	40,430	3.000
3.250							25,747	31,117	34,578	43,799	3.250
3.500								33,510	37,238	47,169	3.500
3.750								35,904	39,898	50,538	3.750
4.000									42,558	53,907	4.000
4.250									45,218	57,276	4.250
4.500									47,878	60,645	4.500
4.750										64,014	4.750
5.000										67,384	5.000
Cont. Torque (In-Lb)	371	778	2,768	4,000	5,800	9,000	16,000	27,500	43,500	65,000	
Peak Torque (In-Lb)	742	1,556	5,536	8,000	11,600	18,000	32,000	55,000	87,000	130,000	

Contact Factory for smaller bore options

Contact Factory if higher transmittable torque keyless hub options are required

Listed number indicates the transmittable torque of the keyless hub connection (in-lb)
The ● symbol indicates that the keyless hub connection will transmit the full rated peak torque of the coupling

Split-Clamping Hubs

Contact Factory for Shrink-Disc Hub Option

Transmittable Torque for Two-Piece Split Clamp Hubs -- Non-Keyed Bore Hubs (Metric)

If Higher Transmittable Torque is Required, consider using Keyway, Larger Size Coupling, Shrink-Disc Hub, or Special Design. Please Contact Factory.

Bore Size (mm)	CD® Power Series Model Number										Bore Size (mm)
	8_55	8_67	12_85	12_95	12_105	12_120	12_140	12_165	12_190	12_215	
12	32										12
14	42										14
15	45										15
16	53	62									16
18	60	69									18
20	66	77									20
22	73	85	187	288							22
24	80	92	204	315							24
25	83	96	213	328							25
28	●	108	239	367	381	728					28
30		116	256	393	409	780					30
32		123	273	420	436	832	1,128				32
35		135	298	459	477	910	1,234	1,491			35
38			324	498	518	988	1,339	1,619			38
40			341	524	545	1,040	1,410	1,704			40
42			358	551	572	1,092	1,480	1,789	1,988		42
45			383	590	613	1,170	1,586	1,917	2,130		45
50			426	656	681	1,300	1,762	2,130	2,367	2,998	50
55					749	1,430	1,938	2,343	2,603	3,297	55
60					817	1,560	2,115	2,556	2,840	3,597	60
65						1,690	2,291	2,769	3,077	3,897	65
70						1,820	2,467	2,981	3,313	4,197	70
75							2,643	3,194	3,550	4,496	75
80							2,819	3,407	3,786	4,796	80
85								3,620	4,023	5,096	85
90								3,833	4,260	5,396	90
95								4,046	4,496	5,695	95
100									4,733	5,995	100
105									4,970	6,295	105
110									5,206	6,595	110
115									5,443	6,895	115
120										7,194	120
125										7,494	125
130										7,794	130
Cont. Torque (Nm)	42	88	313	452	655	1,017	1,808	3,107	4,915	7,345	
Peak Torque (Nm)	84	176	626	904	1,310	2,034	3,616	6,214	9,830	14,690	

Contact Factory for smaller bore options

Contact Factory if higher transmittable torque keyless hub options are required

Listed number indicates the transmittable torque of the keyless hub connection (Nm)
The ● symbol indicates that the keyless hub connection will transmit the full rated peak torque of the coupling

Split-Clamping Hubs

Contact Factory for Shrink-Disc Hub Option

Information Required

- Continuous and Peak Torque requirements, and/or motor HP.
- Maximum Coupling RPM.
- Distance Between Shaft Ends (DBSE).
- Service factor.
- Misalignment requirements.
- Physical space limitations.
- Hub bores, keyways, flange size.
- Other operating environment considerations.

Selection Procedure

1. Select a coupling type (Single-Flex or Double-Flex) based on misalignment and/or DBSE (Distance Between Shaft Ends) requirements.
2. Determine the required service factor.
3. If continuous torque is known, then multiply it by the required service factor to get the Design Torque:
   Design Torque (in-lbs) = Continuous Torque (in-lbs) x Service Factor
   If continuous torque is not known, size to the peak torque of the servomotor (or reflected torque at output of gearbox, if applicable) If Horsepower and RPM are known, calculate the Design Torque by using this formula:
   Design Torque (in-lbs) = $\frac{\text{HP x 63,000 x Service Factor}}{\text{Coupling RPM}}$
4. Select a coupling size that has a continuous torque rating equal to or greater than the Design Torque calculated in step 3. Make sure that the peak torque of the application does not exceed the maximum torque rating of the coupling. Torque values above the continuous torque rating of the coupling should happen very rarely for maximum lifespan. Torque values should never exceed the peak torque rating of the coupling.
5. If using a keyless shaft clamping hub connection, verify that the transmittable torque of the connection exceeds the application requirement. Consult with factory if other keyless hub connections should be considered.
6. Check coupling RPM to be sure it is within the rated maximum speed. Consult with factory if your speed exceeds the ratings – we have made many special couplings that greatly exceed these ratings.
7. Make sure that the misalignment capability is sufficient. As with all couplings, there is a trade-off between the parallel, angular, and axial misalignment capabilities. Be certain that the combined percentages of each do not exceed 100%. If you have a question on combined misalignments, consult the factory. It is always best to select a coupling with misalignment capabilities exceeding the initial operating conditions to allow for changing conditions over the operating life of the machine.
8. Check to be sure that the coupling fits the required dimensions such as available space envelope, DBSE, and bore sizes.
9. If the coupling size and type meet the torque, misalignment, bore size and space criteria, the selection is complete.

Note: If the standard couplings listed in the catalog do not meet your requirements, please consult the factory. We will work with you to provide a special Coupling to meet the needs of the application.

# of bolts	Configuration	Size (OD in mm)	Hub 1	Bore / Fit	Keyway?	Hub 2	Bore / Fit	Keyway?
8 = 8 Bolt 12 = 12 Bolt NOTE: Size 55 & 67 are 8-bolt All other sizes are 12-bolt	A = Single Flex P= Double Flex	55 67 85 95 105 120 140 165 190 215	C1 = Single Bolt/ Integral Clamp C2 = Two-Bolt/ Split Clamp SD = Shrink Disc AM = ISO 9409-1 Adaptor FM = Flange Mount NOTE: Refer to Catalog for Available Sizes of Each Hub Style	0500 = 0.500" Bore 1500 = 1.500" Bore 30mm = 30mm Bore 42mm = 42mm Bore Adaptor or Flange Code NOTE: Refer to Catalog for Adaptor/Flange Codes	K = With Keyway N = No Keyway NOTE: Keyway Option on Clamp Hubs Only. Keyway Recommended Refer to Transmittable Torque Chart if using Keyless Clamp Hub	C1 = Single Bolt/ Integral Clamp C2 = Two-Bolt/ Split Clamp SD = Shrink Disc AM = ISO 9409-1 Adaptor FM = Flange Mount NOTE: Refer to Catalog for Available Sizes of Each Hub Style	0500 = 0.500" Bore 1500 = 1.500" Bore 30mm = 30mm Bore 42mm = 42mm Bore Adaptor or Flange Code NOTE: Refer to Catalog for Adaptor/Flange Codes	K = With Keyway N = No Keyway NOTE: Keyway Option on Clamp Hubs Only. Keyway Recommended Refer to Transmittable Torque Chart if using Keyless Clamp Hub
Examples:								
12 12	P A	105 140	C2 FM	1500 1	K N	AM FM	80 1	N N

12P105-C2-1500-K-AM-80mm-N
12A140-FM-1-N-FM1-N

Bore sizes are based on the nominal shaft diameters, as documented by the AGMA Standard 511.02 (Bore and Keyway Sizes for Flexible Couplings).

All clearance fits (standard) are according with the ANSI B4.2 (imperial) and with the ISO 286-1 (metric). Contact Factory for special tolerances.

Standard Keyways

Inch Bore Hubs

Bore Size Over	Bore Size To	Keyway	Bore Size Over	Bore Size To	Keyway
0.437	0.562	0.125 x 0.062	2.250	2.750	0.625 x 0.312
0.562	0.875	0.187 x 0.094	2.750	3.250	0.750 x 0.375
0.875	1.250	0.250 x 0.125	3.250	3.750	0.875 x 0.437
1.250	1.375	0.312 x 0.156	3.750	4.500	1.000 x 0.500
1.375	1.750	0.375 x 0.187	4.500	5.500	1.250 x 0.625
1.750	2.250	0.500 x 0.250	5.500	6.500	1.500 x 0.750

Standard Keyways

Metric Bore Hubs

Bore Size Over	Bore Size To	Keyway	Bore Size Over	Bore Size To	Keyway
10	12	4 x 1.8	58	65	18 x 4.4
12	17	5 x 2.3	65	75	20 x 4.9
17	22	6 x 2.8	75	85	22 x 5.4
22	30	8 x 3.3	85	95	25 x 5.4
30	38	10 x 3.3	95	110	28 x 6.4
38	44	12 x 3.3	110	130	32 x 7.4
44	50	14 x 3.8	130	150	36 x 8.4
50	58	16 x 4.3	150	170	40 x 9.4

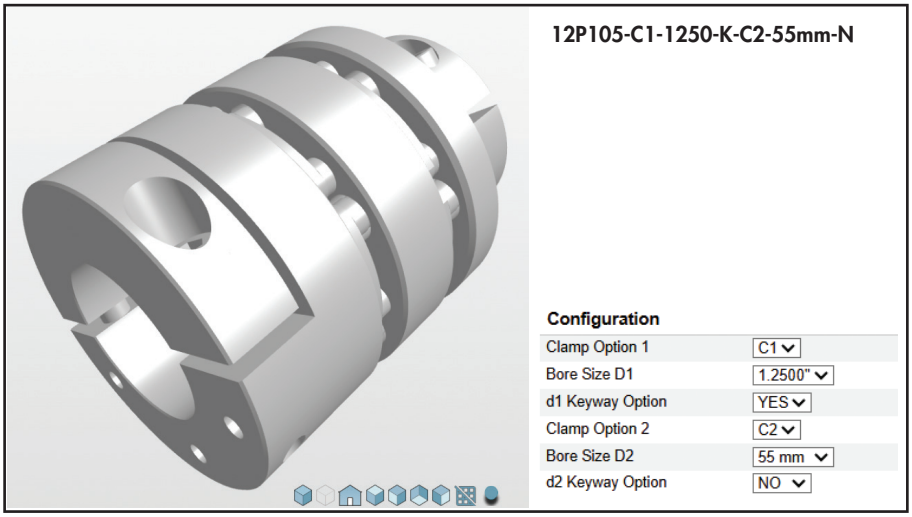

3D CONFIGURABLE DOWNLOADS

Zero-Max Configurable 3D CAD Downloads.
www.zero-max.com

PRECISE. RELIABLE. ROBUST. AVAILABLE.

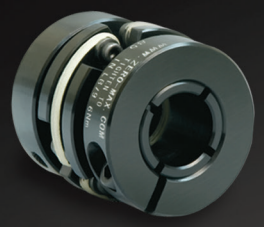

CD® Couplings

High-performance couplings that outperform and outlast bellows and steel disc designs. The unique design of the composite disc enables the CD Couplings to withstand punishing applications and deliver high precision performance. Fully Customizable.

Keyless Shaft Locking Devices

ETP® keyless connections and Posi-Lok® keyless bushings provide quick, easy and accurate assembly of mounted shaft components. Both inch and metric bore sizes are available from stock.

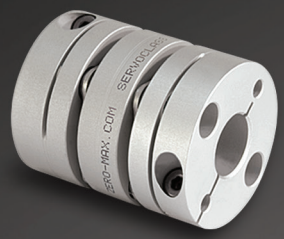

ServoClass® Couplings

Designed for demanding servomotor applications. Zero backlash, high torsional stiffness, high speed design. Features flexible metal discs for high misalignment capacity and keyless clamp-type mounting hubs.

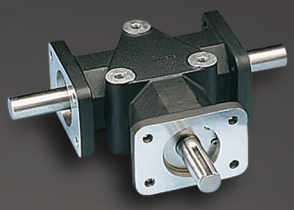

Crown Gear Drives

Available in 5-sizes, 3 configurations, and with 1:1 and 2:1 ratios. High quality AGMA class 10 spiral bevel gears. Stainless steel shafts and either black anodized or IP65-Rated nickel-plated aluminum housing.

Schmidt Offset Couplings

Designed to handle high amounts (up to 17") of parallel shaft offset with constant angular velocity. Standard models with torque capacities up to 459,000 in-lbs and extensive custom capabilities.

Adjustable Speed Drives

Easy to install and maintenance free. Zero-Max® Drives offer infinitely variable speeds from 0 rpm to 1/4 of input rpm. 5 models with torque ranges from 12 in-lbs to 200 in-lbs.

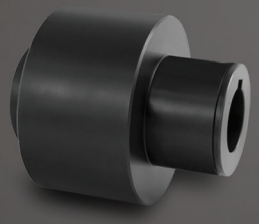

Overload Safety Couplings

Torque Tender® Couplings provide reliable overload protection in any mechanical power transmission system. Full selection of styles and sizes with set-point torque ranges from 3 to 3,000 in-lbs.

Roh'Lix® Linear Actuators

Simple conversion of rotary motion into precise linear motion. Available in five models and multiple configurations. Roh'Lix actuators have thrust ratings from 5 to 200 lbs. All models feature built-in overload protection.

Control-Flex Couplings

Zero backlash couplings designed for encoder and instrumentation type applications. Features high misalignment capacity, constant velocity, and an electrically isolated hub design.

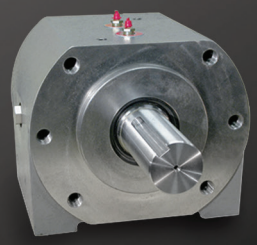

OHLA® Overhung Load Adaptors

Designed to protect hydraulic motors and pumps from radial/axial loads and to provide additional seal protection. 11 models available for mounts from SAE A to SAE F. Fully customizable.

Warranty. Zero-Max, Inc. the manufacturer, warrants that for a period of 12 months from date of shipment it will repair, or at its option, replace any new apparatus which proves defective in material or workmanship, or which does not conform to applicable drawings and specifications approved by the manufacturer. All repairs and replacements shall be F.O.B. factory. All claims must be made in writing to the manufacturer. • In no event and under no circumstances shall manufacturer be liable for (a) damages in shipment; (b) failures or damages due to misuse, abuse, improper installation or abnormal conditions of temperature, dirt, water or corrosives; (c) failures due to operation, intentional or otherwise, above rated capacities, and (d) non-authorized expenses for removal, inspection, transportation, repair or rework. Nor shall manufacturer ever be liable for consequential and incidental damages, or in any amount greater than the purchase price of the apparatus. • Zero Max, Inc. reserves the right to discontinue models or to change specifications at any time without notice. No discontinuance or change shall create any liability on the part of Zero-Max, Inc. in respect to its products in the hands of customers or products on order not incorporating such changes even though delivered after any such change. • This warranty is in LIEU OF ALL OTHER WARRANTIES, EXPRESS OR IMPLIED, INCLUDING (BUT NOT LIMITED TO) ANY IMPLIED WARRANTIES OF MERCHANTABILITY OR FITNESS FOR A PARTICULAR PURPOSE. THE TERMS OF THIS WARRANTY CONSTITUTE ALL BUYER'S OR USER'S SOLE AND EXCLUSIVE REMEDY, AND ARE IN LIEU OF ANY RIGHT TO RECOVER FOR NEGLIGENCE, BREACH OF WARRANTY, STRICT TORT LIABILITY OR UPON ANY OTHER THEORY. Any legal proceedings arising out of the sale or use of this apparatus must be commenced within 18 months of the date of purchase. • CAUTION: Rotating equipment must be guarded. Also refer to OSHA specifications and recommendations. • Zero-Max®, CD®, ETP®, ServoClass®, Torq-Tender®, Posi-Lok®, Roh'Lix®, and OHLA® are registered trademarks of Zero-Max, Inc. In U.S.A.

©Zero-Max, Inc., All Rights Reserved
Printed in U.S.A., Rev1.01S

ZERO-MAX®

13200 Sixth Avenue North, Plymouth, Minnesota 55441-5509
Phone 800.533.1731 763.546.4300 FAX 763.546.8260

zero-max.com